Conceal LED

MARTEC®

Conceal 3 Pack Cabinet Lights 3000K

Lighting Council AUSTRALIA MEMBER

The Conceal LED cabinet light pack includes 3 x 4w COB downlights, driver with flex and plug and all accessories required for a DIY installation.
The Conceal can either be surface mounted or fully recessed which increases the flexibility of the range of applications that you can use this product on. Including kitchen cabinets, under benches or to highlight an area.

SAA | ENERGY EFFICIENT | DIY | 3YEAR REPLACEMENT WARRANTY

MLCD330W

MLCD330B

FEATURES

- 3 year replacement warranty
- Advanced heat sink diffusion
- Recessed or surface mounted
- DIY cabinet light
- Long life energy saving LED technology
- The driver can run up to 6 single heads

TECHNICAL INFORMATION

Power: 4W (per head)
CCT: 3000K (Warm White)
Lumens: 350 lm (per head)
Beam Angle: 110°
Size (mm): 67mm x 18mm (when surface mounted)
CRI: ≥80

DIAGRAMS

Lux-Distance Diagram

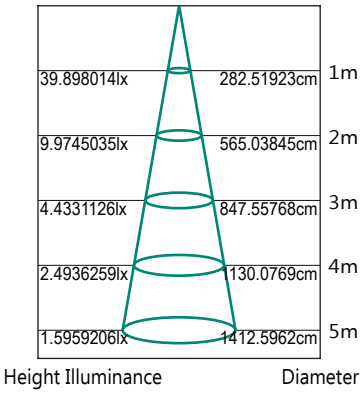
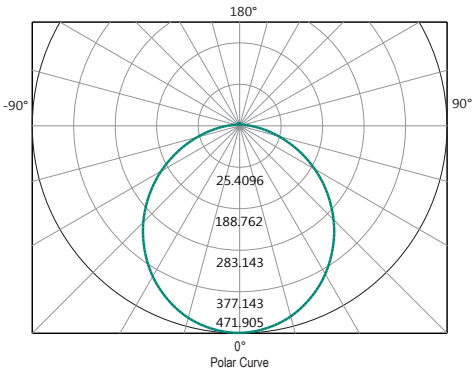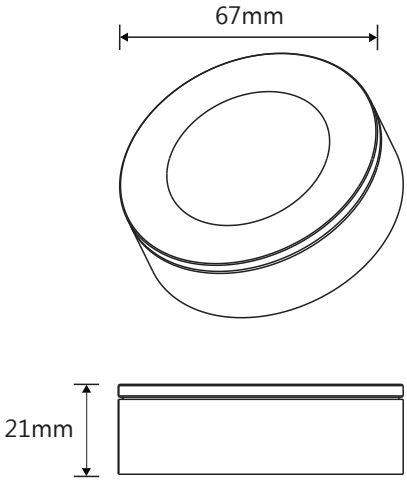
Polar Curve