RECESSED EXIT

Recessed LED Emergency Exit Light

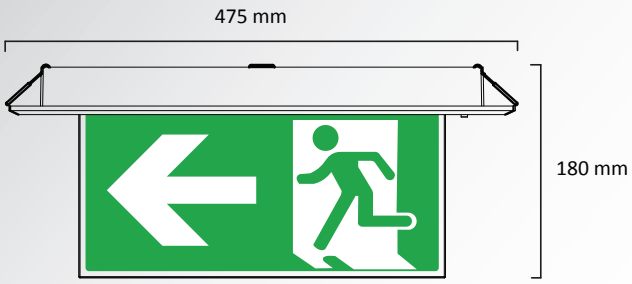

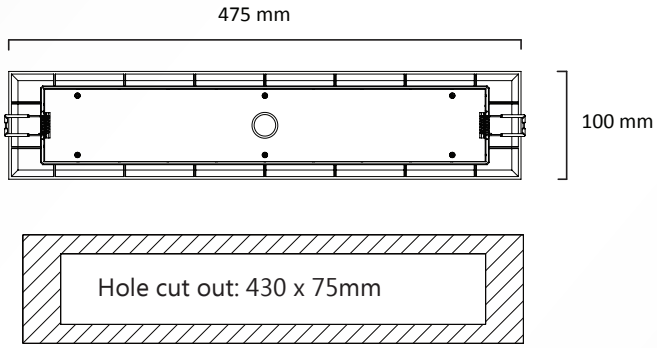

ORDERING INFORMATION

General	
Code	TLEER360
Description	Recessed LED Emergency Exit Light

COMPLIANCE

The Emergency Exit has been tested to comply with relevant Australian/New Zealand standards.

- AS/NZS 60598.2.1:2014
- AS/NZS 60598.1.2011
- Approval No. GMA-502288
- AS 2293

Technical Information	
Warranty	3 year replacement
Voltage (V)	220-240V
Frequency (Hz)	50Hz
Max Ambient Temp	40^0C
Class	2
Duration	90 / 120 min
IP Rating	IP20
Emergency Classification	C0:E2.5 C90:E2.0 (3Hr)
Average Power Consumption	2.2W (maintained)
Mounting Type	Recessed
Wiring	Terminal Block
Viewing Distance	24M
Battery Type	Li-ion
Battery Voltage	3.7V
Charging Time	16 hours
Charger Type	Variable
Max Power Consumption	3.5W (maintained)